Illumitex LED

Technical Data Sheet

Surexi™ Growth LEDs
Horticulture Lighting
F1 Growth Spectrum

Revolutionary Plant Growth LEDs

Illumitex has created a patented, breakthrough class of LEDs that is light years ahead of existing products. The Surexi package design eliminates the need for secondary optics to control the beam angle while delivering maximum PPF to the targeted plants. The radiation pattern can be tailored to any beam angle from 55˚ to 120° (FWHM). While the F1 Growth Spectrum is very effective in spurring photosynthesis, the arrays can be modified to deliver custom spectra to meet your application requirements.

Maximum Delivered PPF per Watt

The patented package design substantially reduces the total volume of the light engine, thereby allowing luminaire and lamp engineers to create breakthrough lighting solutions with unrivaled optical performance. The Surexi series also delivers breakthrough uniformity ratios within the specified beam angle, and produces the sharpest cut-offs available. By incorporating Illumitex' proprietary beam control technology, the Surexi LED puts more light on the targeted plants than any other LED package.

Features

- Revolutionary beam angle control
- Maximum light on plants
- Custom spectra for various species
- Highest delivered PPF per Watt
- Eliminate secondary and tertiary optics
- IP66 wet location rating
- Unrivaled color uniformity
- Multi-die array provides robust redundancy
- Lower fixture BOM and assembly costs
- Reduce fixture or lamp light engine size
- Available in a variety of beam angles

Typical Applications

- Greenhouse Lighting
- Indoor Hydroponics
- University R&D
- Pharmacology Development

Surexi™ Horticulture LEDs

Copyright 2009 Illumitex Inc. All right reserved. The information in this document is subject to change without prior notice
Illumitex Inc., 5307 Industrial Oaks Blvd., Suite 100, Austin, TX 78735 USA
Tel: +1-512-279-5020 www.illumitex.com

TABLE OF CONTENTS

Specifications	3
Part Number Sequence	4
Typical Characteristics	5-6
Mechanical Dimensions	7
Packaging and Labeling	8
Reliability Data	9
Notes	10

Copyright 2009 Illumitex Inc. All right reserved. The information in this document is subject to change without prior notice
Illumitex Inc., 5307 Industrial Oaks Blvd., Suite 100, Austin, TX 78735 USA
Tel: +1-512-279-5020 www.illumitex.com

Specifications

Absolute Maximum Rating at Ta = 25°C

Item	Symbol	Absolute Maximum Rating	Unit
Forward Current	I_f	600	mA
Reverse Voltage	V_r	20	V
Power Dissipation	P_d	6600	mW
Operating Temperature	T_b	-30 to 85	°C
Storage Temperature	T_{stg}	-40 to 85	°C
Die Temperature	T_j	115	°C

Thermal Characteristic at Ta = 25°C

Item	Symbol	Typical	Unit
Heat Resistance	R_{jb}*	2	°C/W

- * Represents junction to bottom of mounting surface

Electrical/Optical Characteristics at Ta = 25°C

Item	Symbol	Condition	Typical	Max	Unit
Forward Voltage	V_f	**If = 500mA**	10.0	11.0	V
Radiometric Power	Wrad	**If = 500mA**	1.7	-	W
Photosynthetic Photon Flux	PPF	**If = 500mA**	8.5	-	µmoles/s
PPF/W Electrical	J	If = 500mA	1.7	-	µmoles/Joule

Copyright 2009 Illumitex Inc. All right reserved. The information in this document is subject to change without prior notice
Illumitex Inc., 5307 Industrial Oaks Blvd., Suite 100, Austin, TX 78735 USA
Tel: +1-512-279-5020 www.illumitex.com

Part Number Sequencing

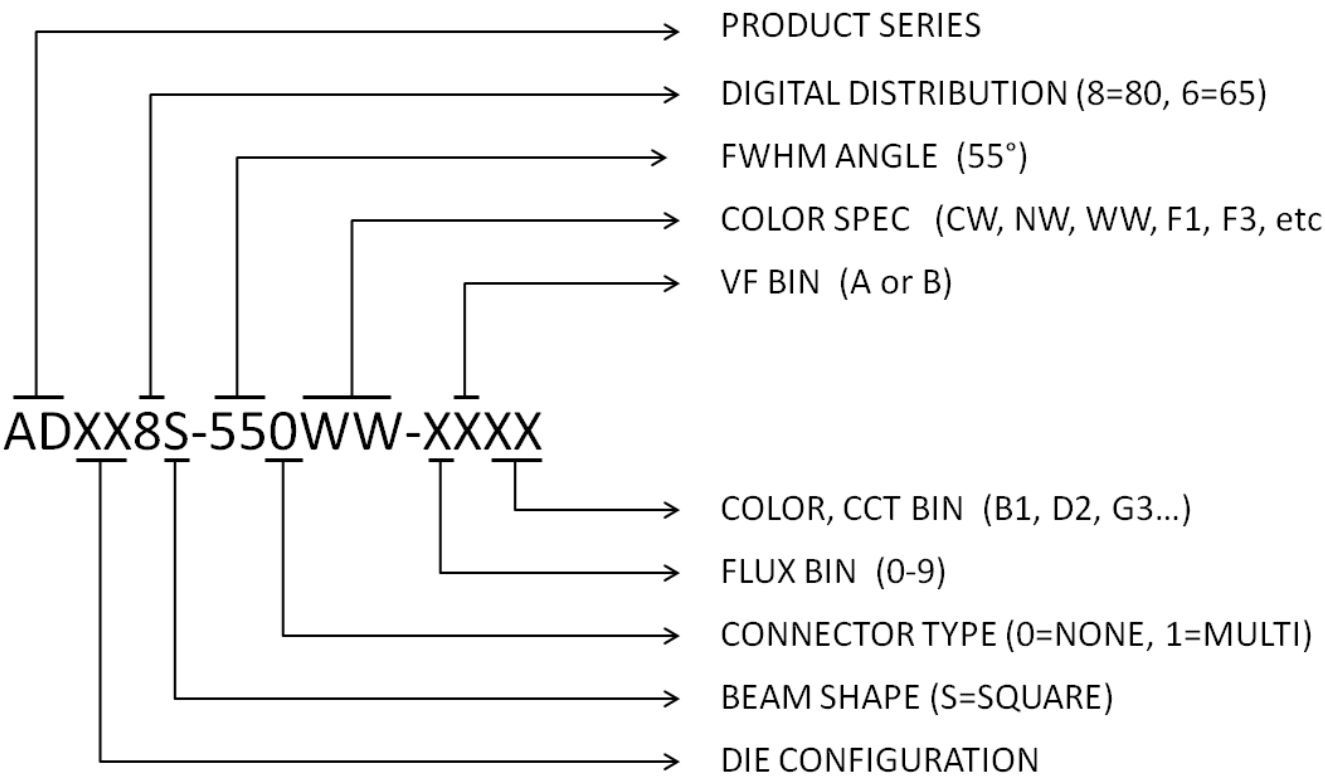

Copyright 2009 Illumitex Inc. All right reserved. The information in this document is subject to change without prior notice
Illumitex Inc., 5307 Industrial Oaks Blvd., Suite 100, Austin, TX 78735 USA
Tel: +1-512-279-5020 www.illumitex.com

Typical Characteristics

Radiation Pattern – 55˚ Beam Angle

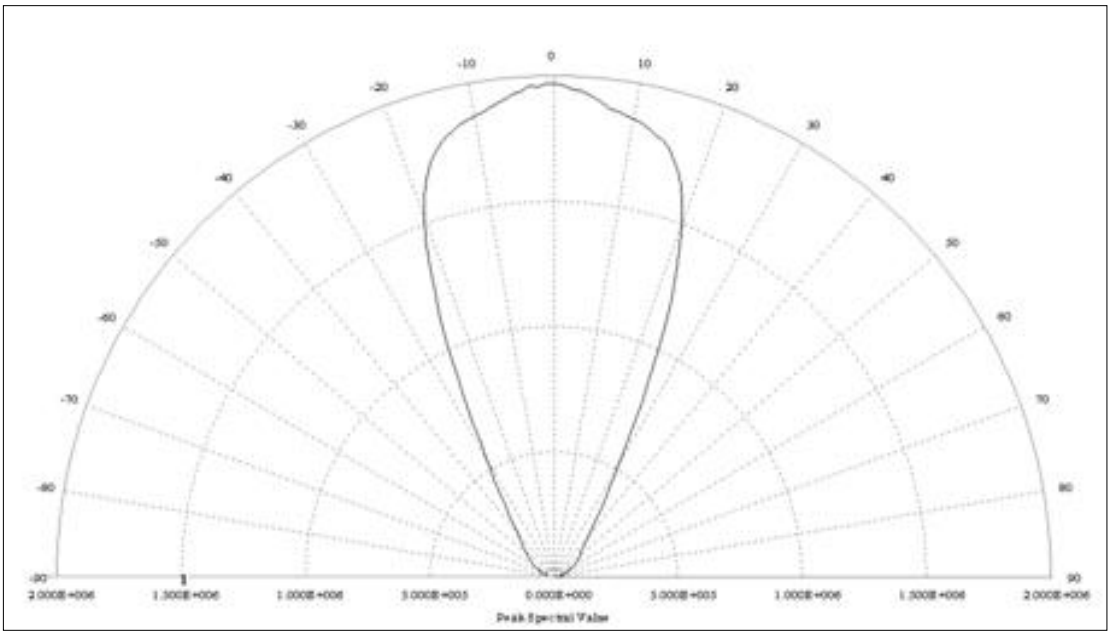

Photosynthetically Active Radiation Spectra

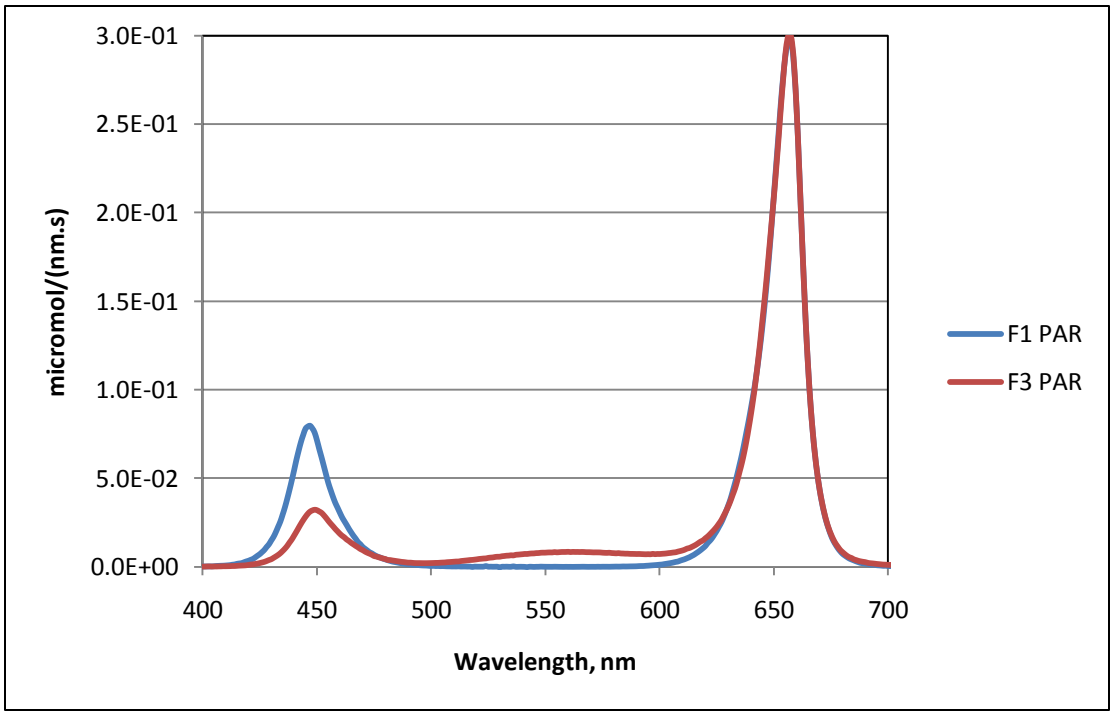

Copyright 2009 Illumitex Inc. All right reserved. The information in this document is subject to change without prior notice
Illumitex Inc., 5307 Industrial Oaks Blvd., Suite 100, Austin, TX 78735 USA
Tel: +1-512-279-5020 www.illumitex.com

Typical Characteristics

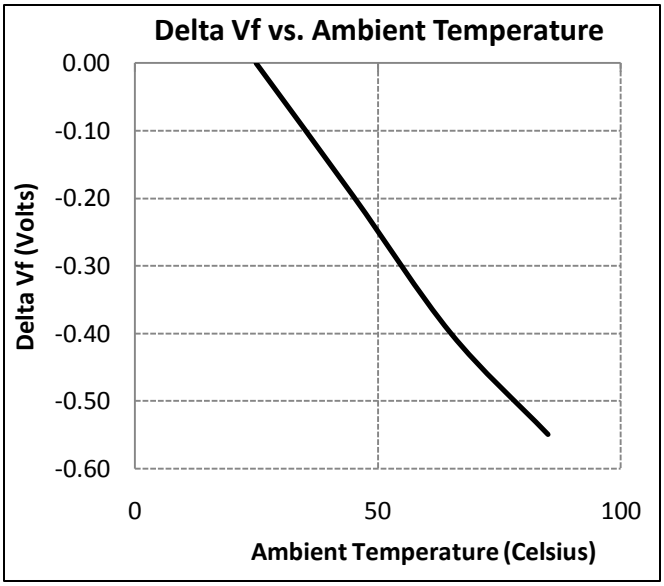

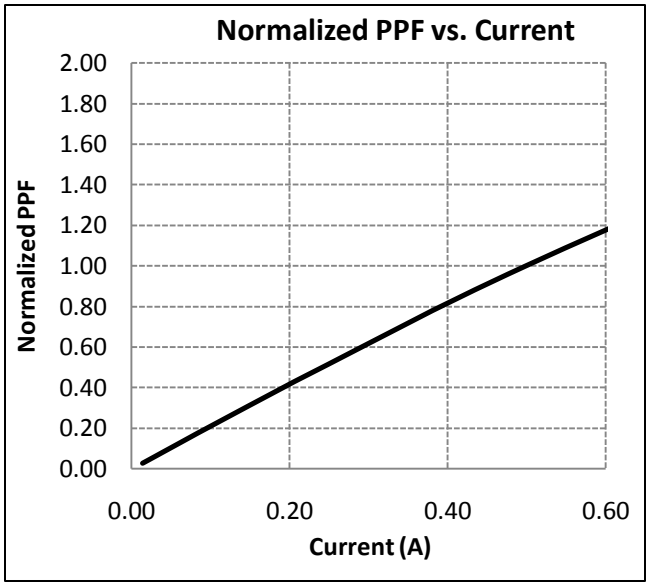

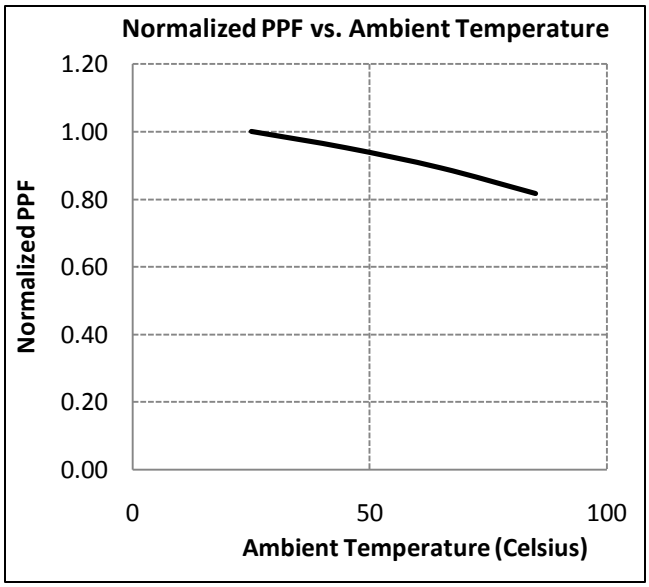

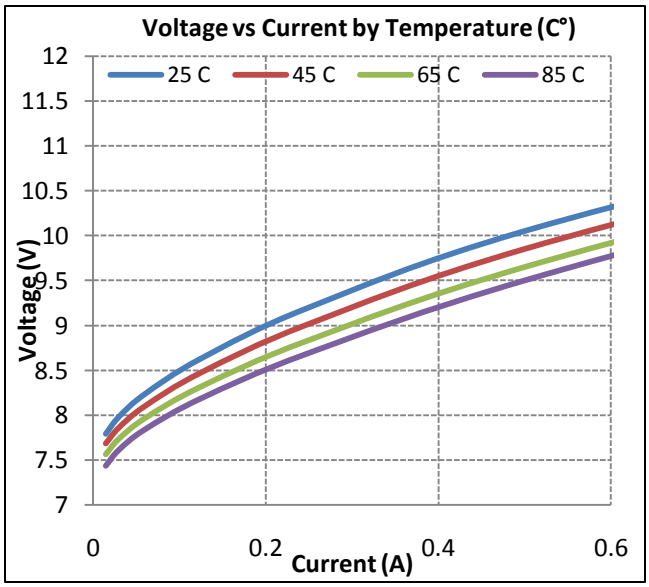

Copyright 2009 Illumitex Inc. All right reserved. The information in this document is subject to change without prior notice
Illumitex Inc., 5307 Industrial Oaks Blvd., Suite 100, Austin, TX 78735 USA
Tel: +1-512-279-5020 www.illumitex.com

Mechanical Dimension

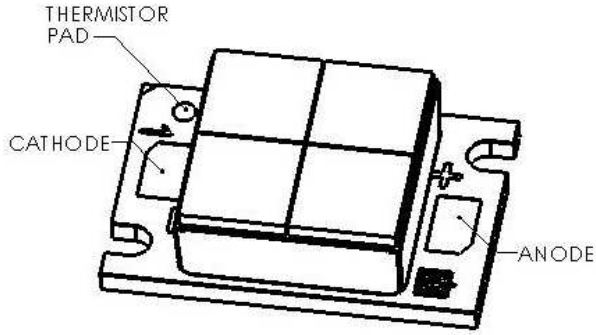

Top View

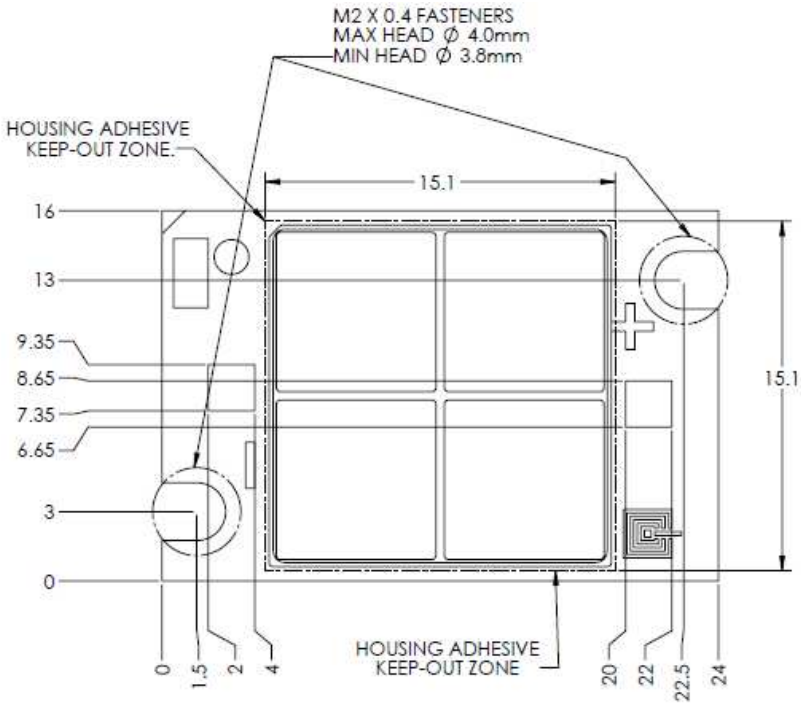

RECOMMENDED FASTENER TORQUE VALUE IS .23-.34 N/m (2-3 IN/LBS).
IT IS THE CUSTOMER'S RESPONSIBILITY TO ESTABLISH SPECIFIC
SCREW TORQUE REQUIREMENTS FOR EACH APPLICATION.

Side View

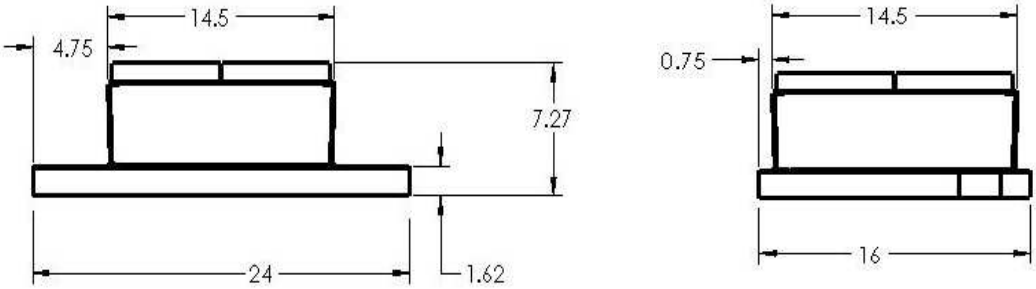

All measurements are in mm unless otherwise indicated

Copyright 2009 Illumitex Inc. All right reserved. The information in this document is subject to change without prior notice
Illumitex Inc., 5307 Industrial Oaks Blvd., Suite 100, Austin, TX 78735 USA
Tel: +1-512-279-5020 www.illumitex.com

Label and Box Spec

Outer Carton Label

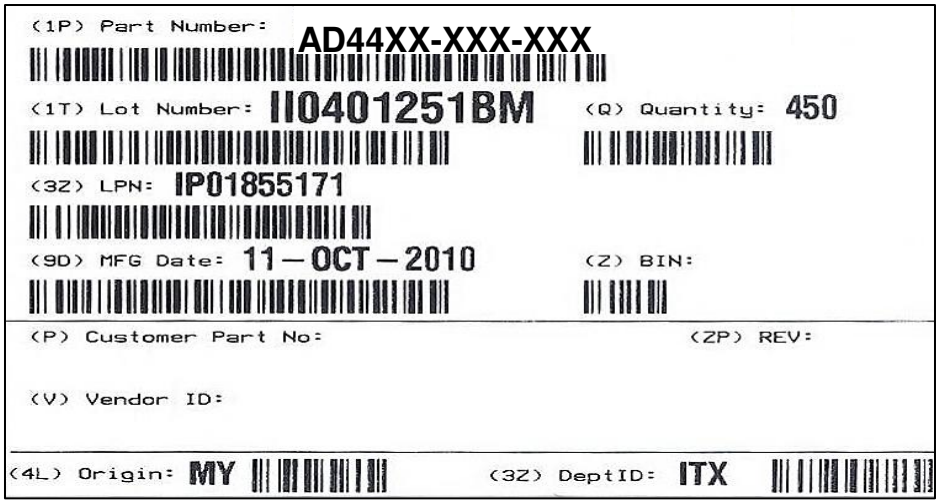

Inner Carton (Tube) Label

Inner Carton Box

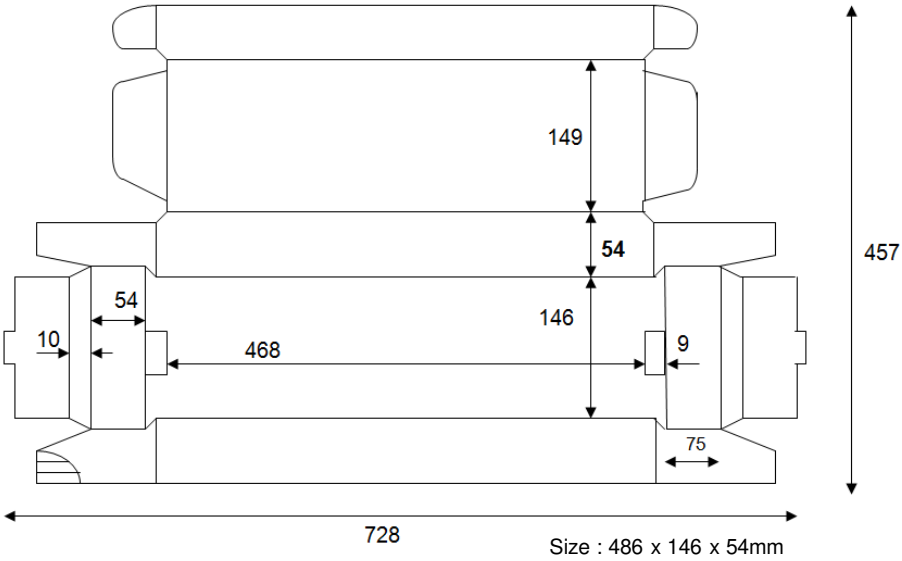

Outer Carton Box

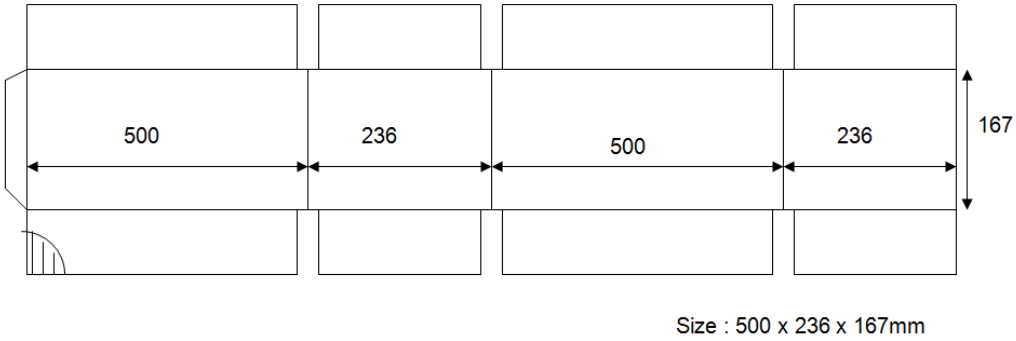

Copyright 2009 Illumitex Inc. All right reserved. The information in this document is subject to change without prior notice
Illumitex Inc., 5307 Industrial Oaks Blvd., Suite 100, Austin, TX 78735 USA
Tel: +1-512-279-5020 www.illumitex.com

Reliability Data

Test		Description	Duration	JEDEC Test Specification	Results*
High temperature operating life	HTOL	85°C ambient, Rated V_F, I_F. T_j=115°C Max	1000 hours	JESD22A-108c	0 Failures**
Room temperature operating life	RTOL	25°C ambient, Rated V_F, I_F	1000 hours	JESD22A108c	0 Failures**
Temperature Humidity Operating Life	WHTOL	85°C/85% RH, Rated V_F, I_F, 50% duty cycle, 2 hour cycle	1000 hours	JESD22A-101c	0 Failures**
Temperature Humidity Bias	THB	85°C/85% RH, Rated V_F, Minimum I_F	500 hours	JESD22A-101c	0 Failures**
Powered Thermal Cycle	PTMCL	-40°C to 120°C, 18 minute, 42 minute transfer (2 hour cycle), 5 minutes ON/5 minutes OFF, I_F=max DC	500 cycles	JESD22A-105c	0 Failures**
Non-operating Thermal Shock	TMSK	-40°C to 120°C, 20 minute dwell, <10 second transfer	500 cycles	JESD22A-106b	0 Failures**
High Temperature Storage Life	HTSL	85°C, Non-operating	1500 hours	JESD22A-103c	0 Failures**
Low Temperature Storage Life	LTSL	-55°C, Non-operating	1000 hours	JESD22A-103c	0 Failures**
Mechanical shock	MS	1500G, 0.5ms pulse	5 shocks each direction in each axis	JESD22A-B104a	0 Failures**
High frequency variable vibration	VVF	Service Condition 1, 20-2000Hz, log variation, 20G Peak, 1.5 mm Displacement	4 minutes, 4 times in each axis	JESD22B-103b	0 Failures**
Electrostatic discharge	ESD-HBM	Human Body Model, 8kV, T_a=25°C	1 positive strike and 1 negative strike at each voltage level, 3 units each voltage	JESD22A-114	0 Failures**

* Failure occurs when devices fail to maintain 70% of initial P_{out} or when an single LED in the matrix fails.

** Preliminary testing completed. Full qualification tests, 3 production lots of 22 units per test for RB, Cool White and warm white to complete by Mar 2011.

Copyright 2009 Illumitex Inc. All right reserved. The information in this document is subject to change without prior notice
Illumitex Inc., 5307 Industrial Oaks Blvd., Suite 100, Austin, TX 78735 USA
Tel: +1-512-279-5020 www.illumitex.com

Notes

1. Details in this data sheet are subject to change at the discretion of Illumitex at any time.

2. All sales referenced to this data sheet are subject to Illumitex Standard Terms and Conditions.

3. Typical and max ratings are shown as reference only. Illumitex will inform customers of both typical and max ratings at the time of inquiry.

4. All dimensions in this data sheet are mm, unless otherwise noted.

5. For quotes of product outlined in this data sheets or any other inquires, please contact sales@illumitex.com

Copyright 2009 Illumitex Inc. All right reserved. The information in this document is subject to change without prior notice
Illumitex Inc., 5307 Industrial Oaks Blvd., Suite 100, Austin, TX 78735 USA
Tel: +1-512-279-5020 www.illumitex.com

5307 Industrial Oaks Blvd, Suite 100
Austin, TX 78735 USA
Tel: +1-512-279-5020
www.illumitex.com

Copyright 2009 Illumitex Inc. All right reserved. The information in this document is subject to change without prior notice
Illumitex Inc., 5307 Industrial Oaks Blvd., Suite 100, Austin, TX 78735 USA
Tel: +1-512-279-5020 www.illumitex.com